HEAD PART

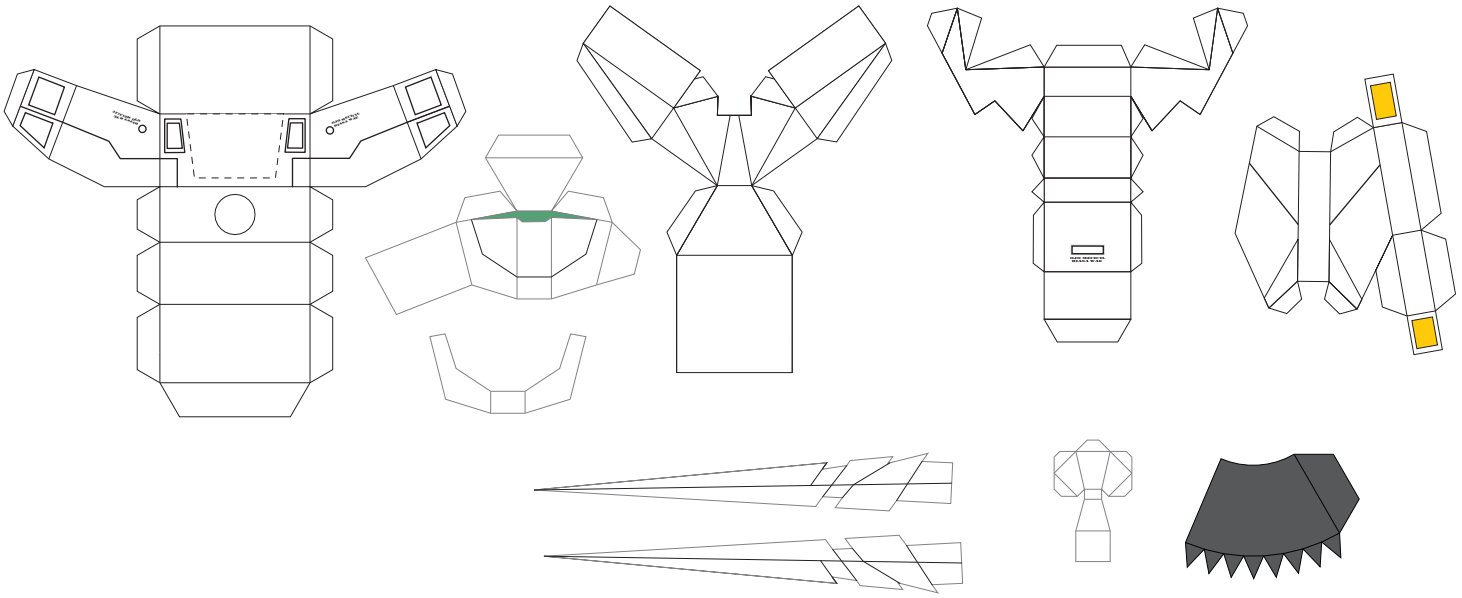

BODY PART

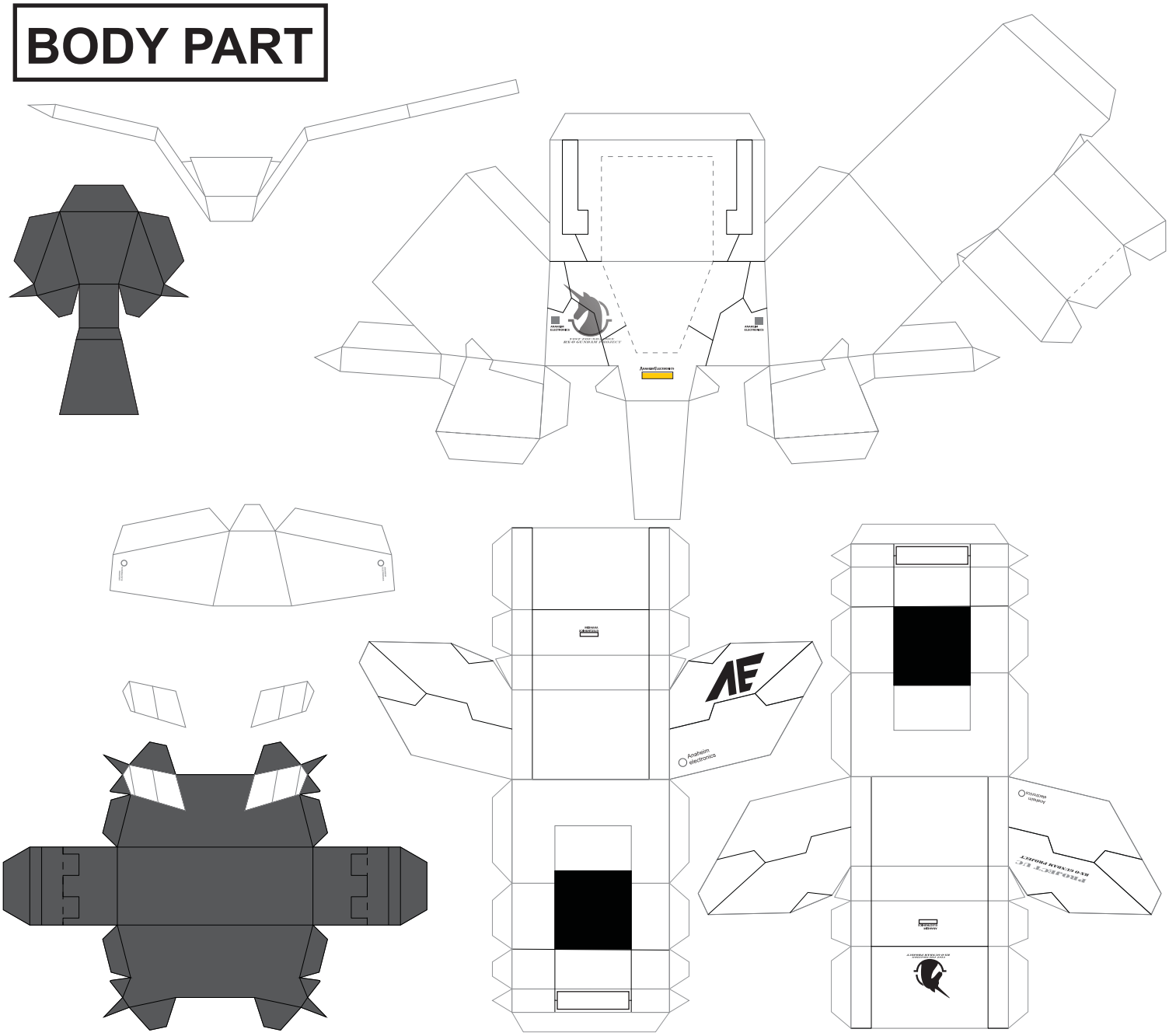

BACKPACK & WAIST PART

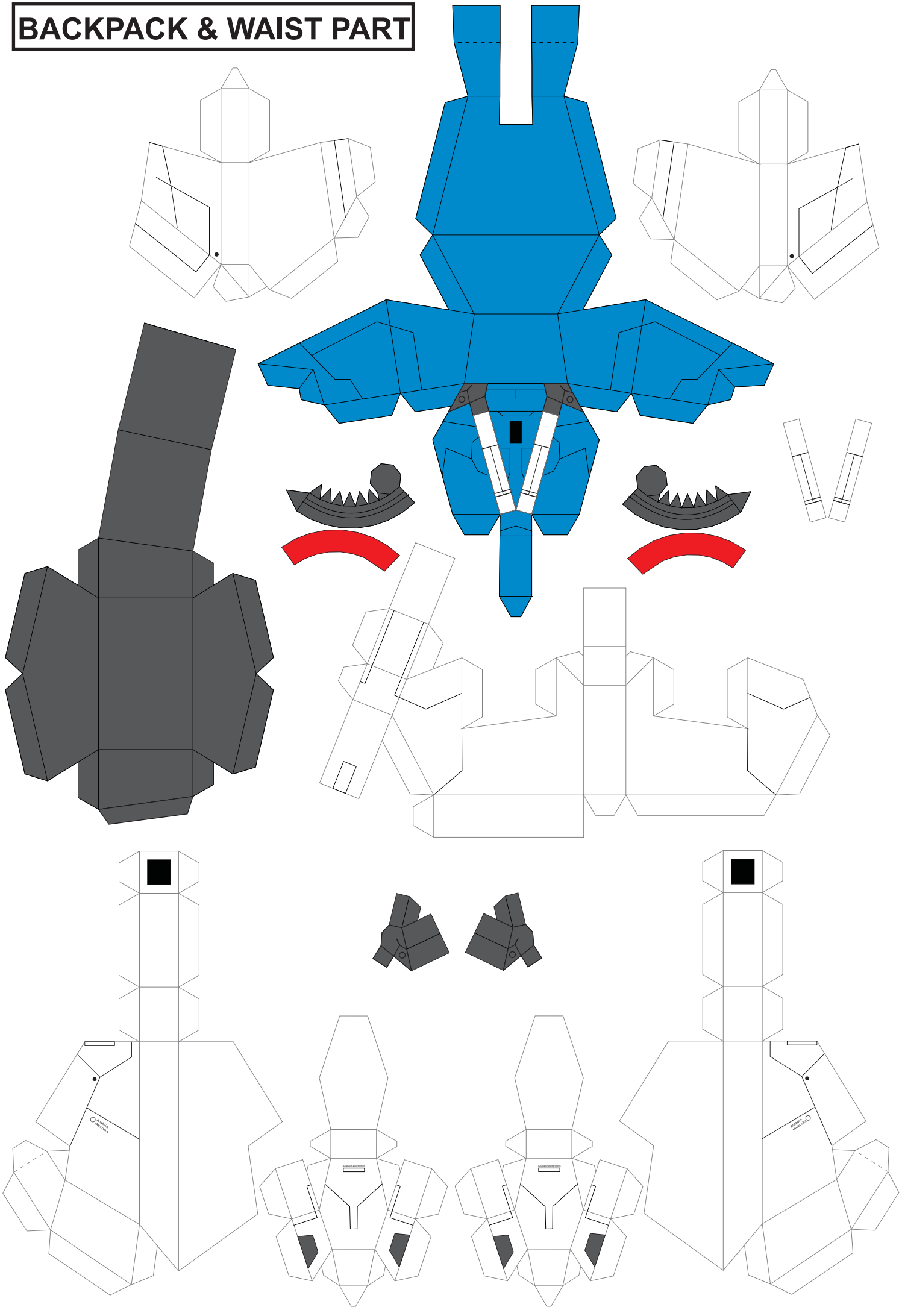

LEG PART

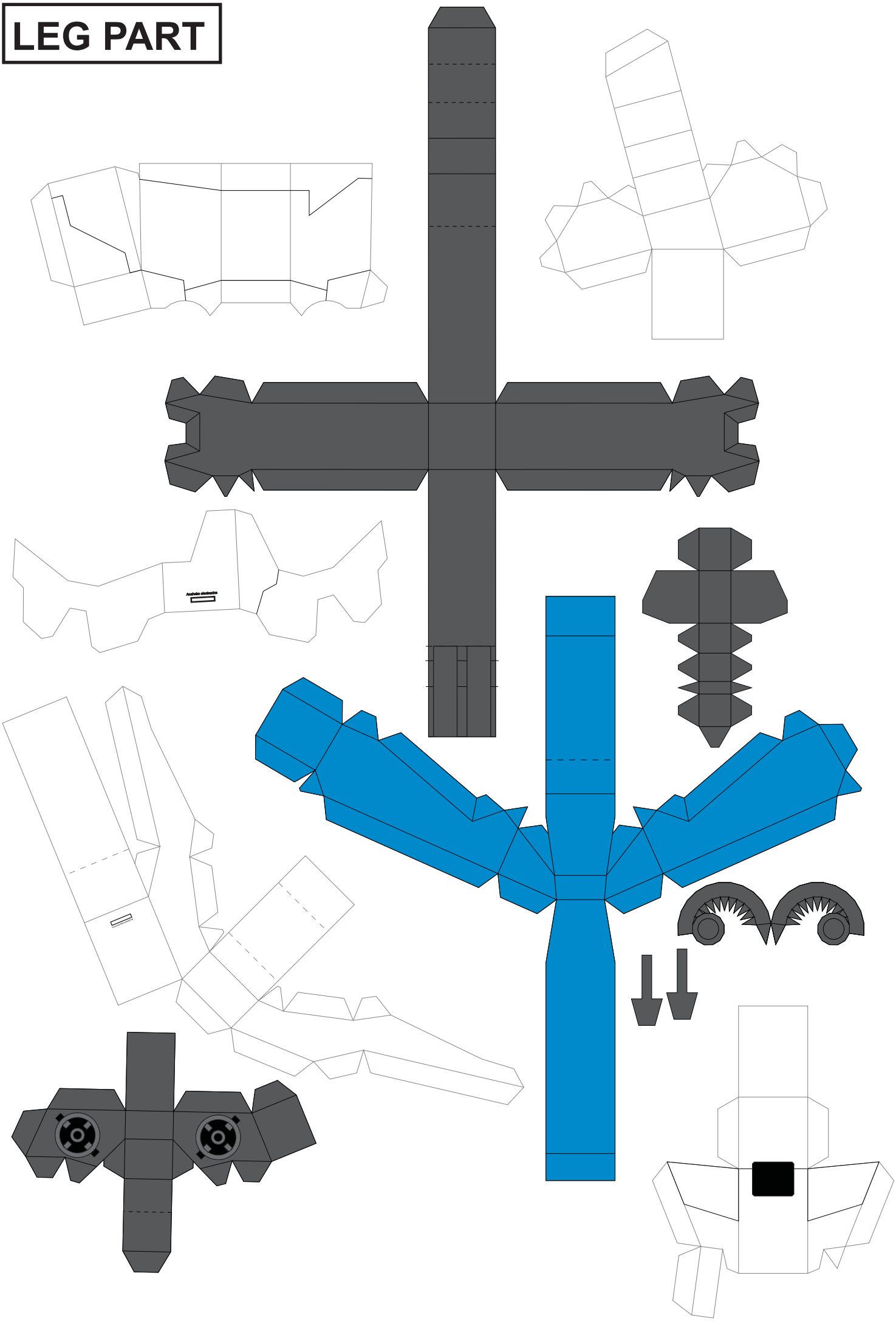

LEG PART

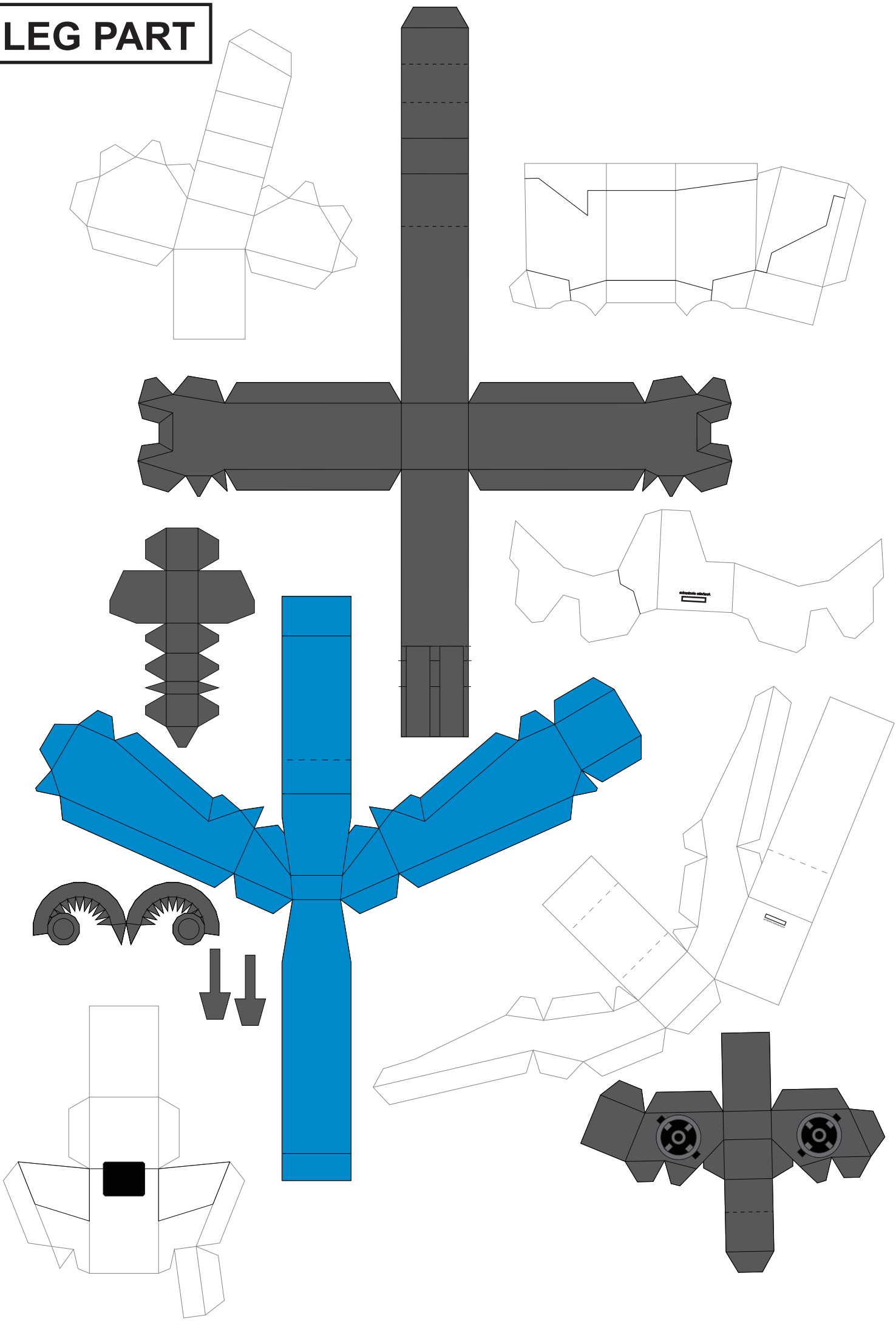

LEG PART

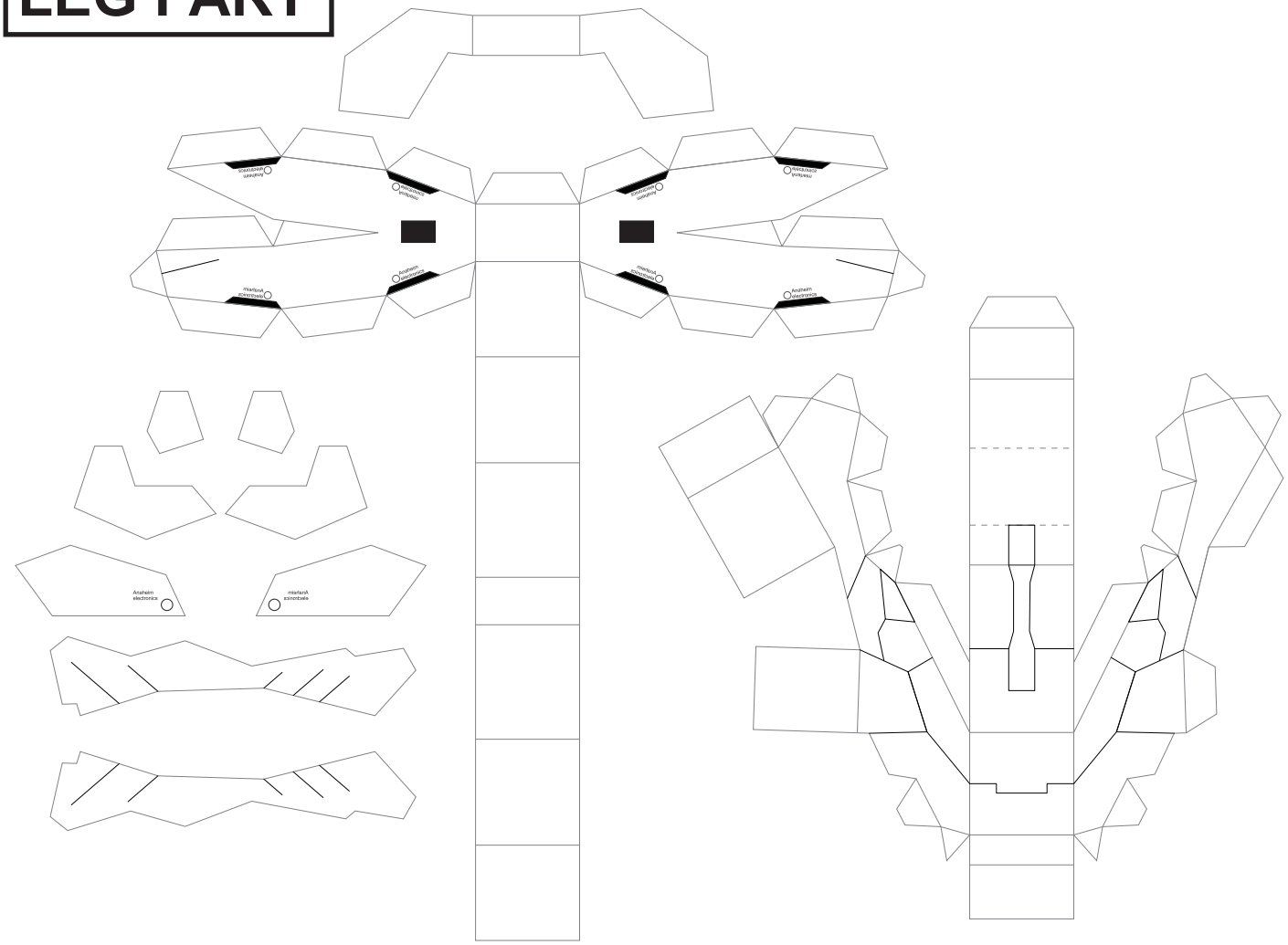
Anaheim electronics
mianfanA scimotoxie

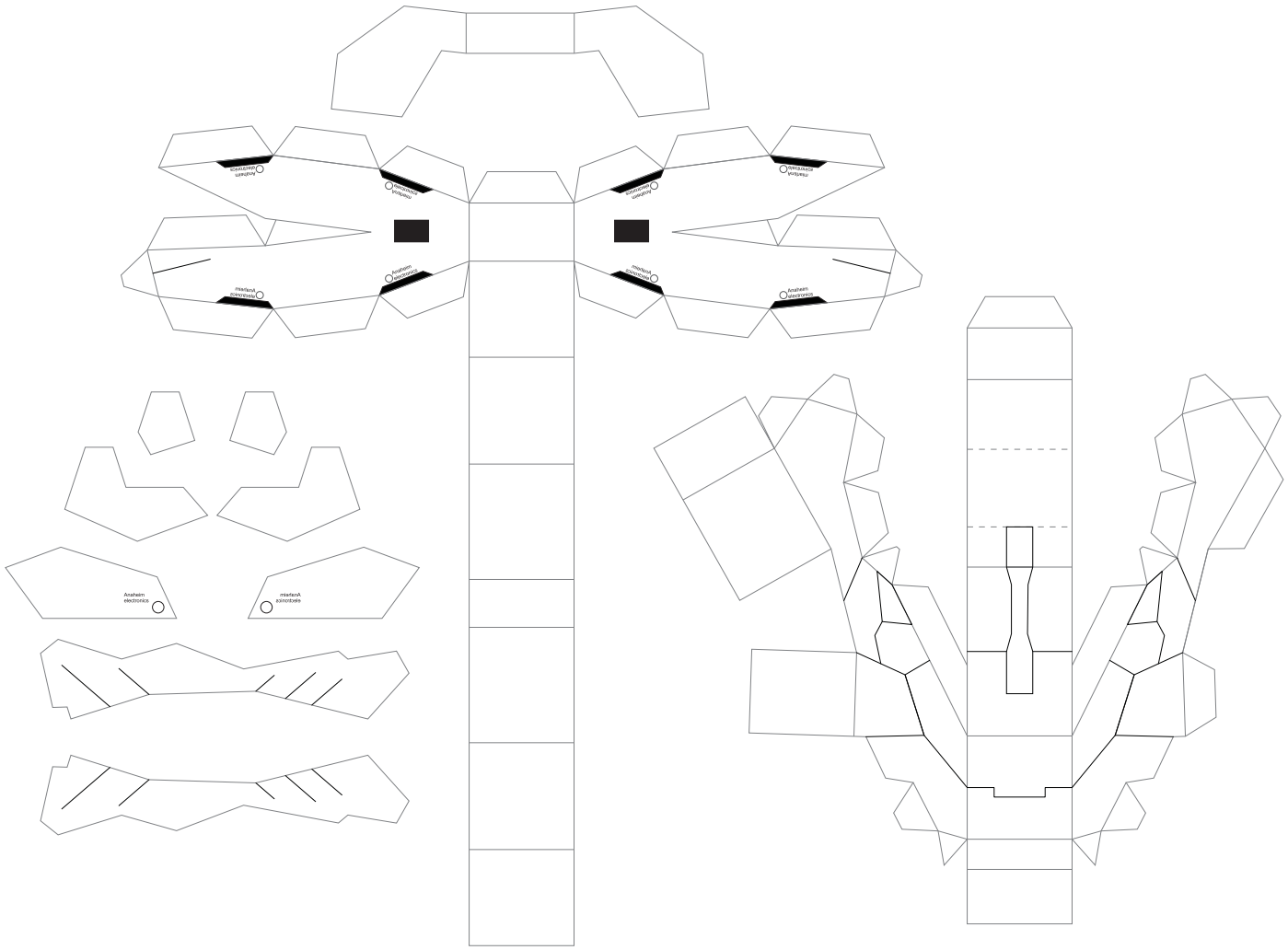
Anaheim electronics
mianfanA scimotoxie

ARM PART

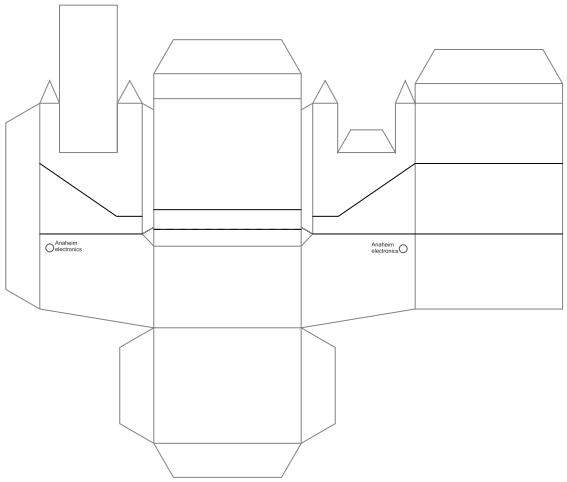
Anaheim electronics
Anaheim electronics

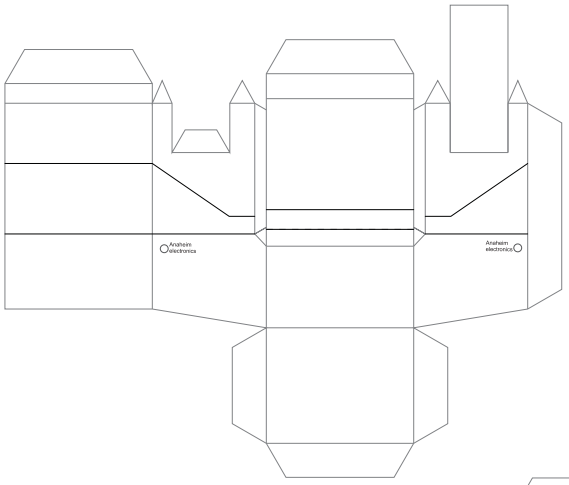
Anaheim electronics
Anaheim electronics

